关于卧龙

1984

30

“ ˘ “ ɣ ɜ Ï

卧龙集团

产品介绍

1Ph 230VAC 50/60Hz
0.15kW~0.3kW
≥ 0.6
-25 60 -40
-30~40
0-10V RS485
B3 B30 B14
IP20 IP44 IP55 IP66
C3-H C4-H
UL CE CCC

	[V]	[Hz]	[kW]	[r/min]		[A]	[%]
EM4210A15***	1~220-240	50/60	0.15	720/960/1000/1050/1200	200~1200	1.4	80%
EM4210A13***	1~220-240	50/60	0.25	720/960/1000/1050/1200	200~1200	2.1	81%
EM4210A12***	1~220-240	50/60	0.37	960/1000/1050/1200	200~1200	2.8	82%
EM4210B15***	1~220-240	50/60	0.15	1350/1500/1800/2200	200~2200	1.5	81%
EM4210B13***	1~220-240	50/60	0.25	1350/1500/1800/2200	200~2200	2.2	82%
EM4210B12***	1~220-240	50/60	0.3	1350/1500/1800/2200	200~2200	3	83%

	A	B	C	D	E	H	K	L	AB	AC	BB	EB	HD
42	112	90	45	12.7/15/17/20	/	71	8.5	244	135	102.5	110	/	135

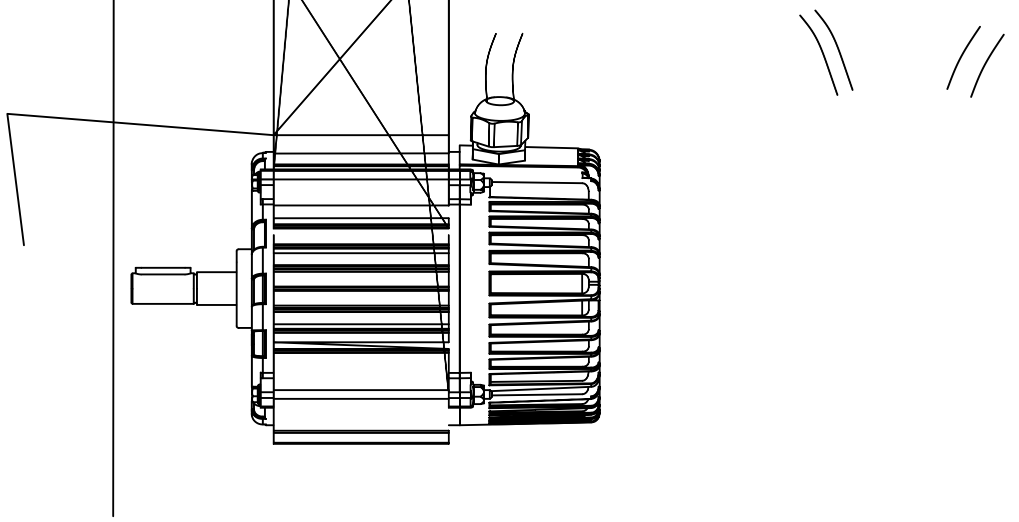

3Ph 380~480VAC 50/60Hz
1.1 2.2kW
≥ 0.9
-25 ~55 -40
-30~40
0-10V RS485
B3 B30 B14
IP55 IP66
C3-H C4-H
UL CE

	[V]	[Hz]	[kW]	[r/min]		[A]	[%]
EM5610A32***	3~380-480V	50/60	1.1	720/960/1000/1050/1200	200~1200	2.4	86%
EM5610A21***	3~380-480V	50/60	1.5	720/960/1000/1050/1200	200~1200	3.2	87%
EM5610A31***	3~380-480V	50/60	2.2	960/1000/1050/1200	200~1200	4.5	88%
EM5610B32***	3~380-480V	50/60	1.1	1350/1500/1800/2200	200~2200	2.4	88%
EM5610B21***	3~380-480V	50/60	1.5	1350/1500/1800/2200	200~2200	3.2	89%
EM5610B31***	3~380-480V	50/60	2.2	1350/1500/1800/2200	200~2200	4.5	90%

	A	B	C	D	E	H	K	L	AB	AC	BB	EB	HD
56	140	100	/	20/24	/	90/100	11	/	180	138.5	130	/	141

h 115, 230,460VAC 3Ph 380~480VAC 50/60Hz
4~1HP,max 1kW
0.7
0 ~55 -40 -30~40
0-10V RS485 PWM

B3 B30
IP20 IP44 IP55 IP66
C3-H C4-H
UL CE CCC

	[V]	[Hz]	[HP]	[r/min]		[A]	[%]
M4810B14***	1~115/230	50/60	1/4	720/960/1000/1050/1200	200~1200	3.1/1.8	81%
EM4810B12***	1~115/230	50/60	1/3	720/960/1000/1050/1200	200~1200	3.6/2.4	82%
EM4810B12***	1~115/230	50/60	1/2	720/960/1000/1050/1200	200~1200	5.9/3.3	82%
EM4810A34***	1~115/230	50/60	3/4	720/960/1000/1050/1200	200~1200	8/4.68	83%
EM4810A11***	1~115/230	50/60	1	960/1000/1050/1200	200~1200	9.5/5.8	84%
EM4810D14***	1~115/230	50/60	1/4	1350/1500/1800	200~1800	3.7/1.7	82%
EM4810D12***	1~115/230	50/60	1/3	1350/1500/1800	200~1800	4/2.2	83%
EM4810D12***	1~115/230	50/60	1/2	1350/1500/1800	200~1800	5.9/3.2	83%
EM4810C34***	1~115/230	50/60	3/4	1350/1500/1800	200~1800	8.4/4.5	85%
EM4810C11***	1~115/230	50/60	1	1350/1500/1800	200~1800	10.7/5.9	86%
EM4810E14***	1~460~480	50/60	1/4	1000/1050/1200/1500/1800	120~1800	0.85	83%
EM4810E12***	1~460~480	50/60	1/3	1000/1050/1200/1500/1800	120~1800	1.6	86%
EM4810E12***	1~460~480	50/60	1/2	1000/1050/1200/1500/1800	120~1800	1.6	86%
EM4810E34***	1~460~480	50/60	3/4	1000/1050/1200/1500/1800	120~1800	2.25	87%
EM4810E11***	1~460~480	50/60	1	1000/1050/1200/1500/1800	120~1800	3	88%

	[V]	[Hz]	[HP]	[r/min]		[A]	[%]
EM4810F14***	3~380~480	50/60	1/4	1000/1050/1200/1500/1800	120~1800	0.52~0.45	84%
EM4810F12***	3~380~480	50/60	1/3	1000/1050/1200/1500/1800	120~1800	0.95~0.84	87%
EM4810F12***	3~380~480	50/60	1/2	1000/1050/1200/1500/1800	120~1800	0.95~0.84	87%
EM4810F34***	3~380~480	50/60	3/4	1000/1050/1200/1500/1800	120~1800	1.33~1.16	88%
EM4810F11***	3~380~480	50/60	1	1000/1050/1200/1500/1800	120~1800	1.77~1.52	89%

	D	E	F	L	AC	DA
48	12.7/15/17/20	/	/	/	143	/

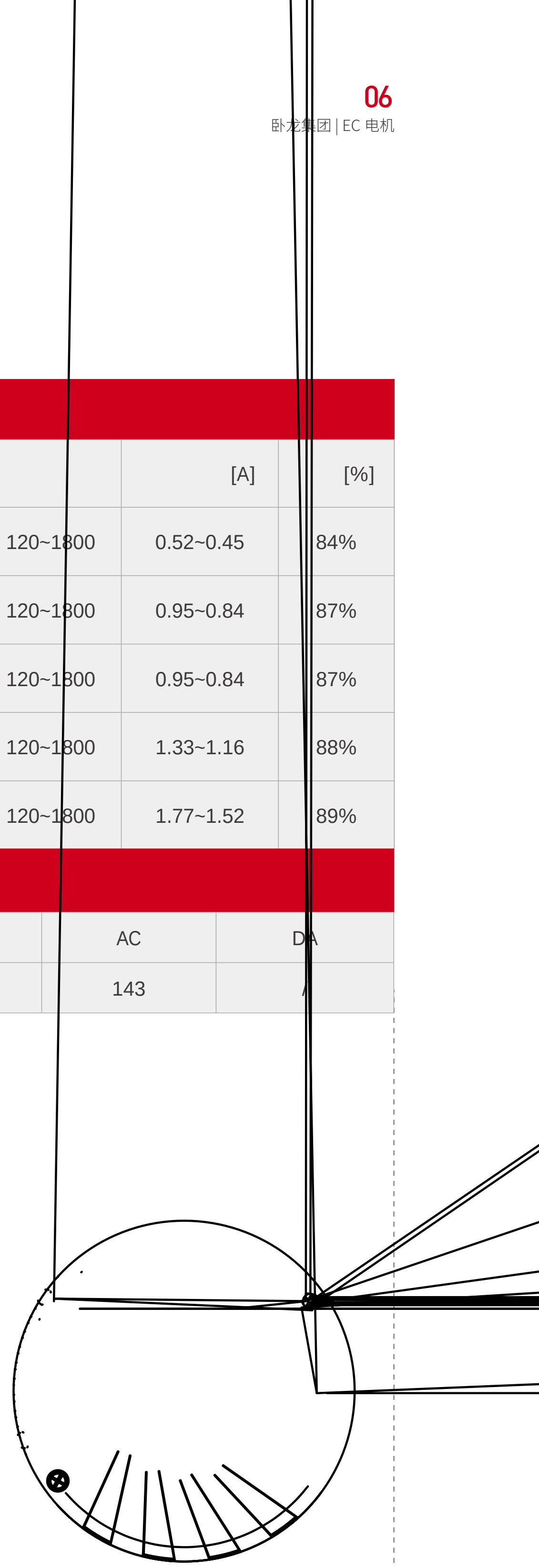

[redacted]